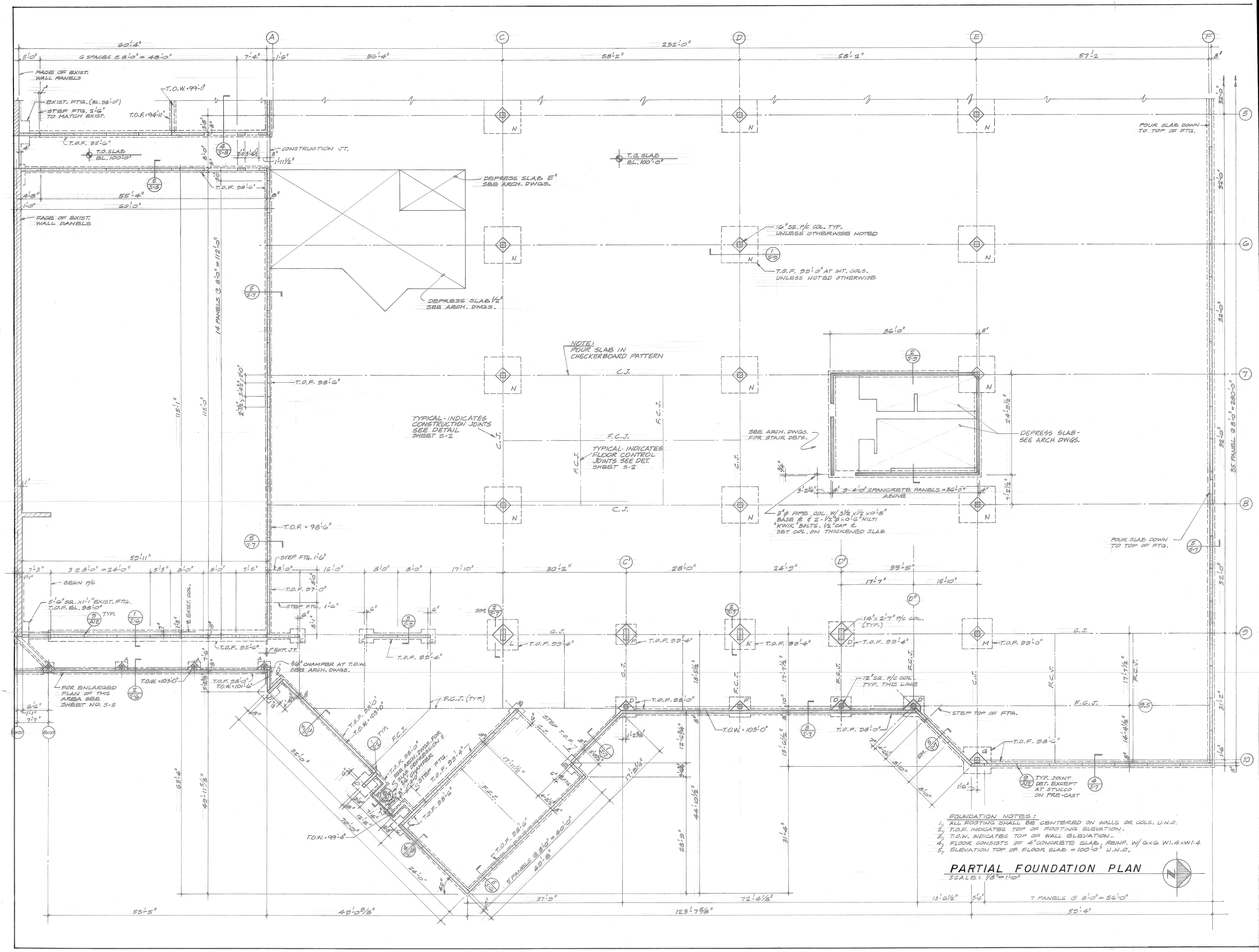

FOUNDATION NOTES:

1. ALL FOOTING SHALL BE CENTERED ON WALLS OR COLS. U.N.O.
2. T.O.F. INDICATES TOP OF FOOTING ELEVATION.
3. T.O.W. INDICATES TOP OF WALL ELEVATION.
4. FLOOR CONSISTS OF 4" CONCRETE SLAB, REINF. W/ 6x6 W1.4xW1.4
5. ELEVATION TOP OF FLOOR SLAB = 100'-0" U.N.O.

PARTIAL FOUNDATION PLAN

SCALE: 1/8" = 1'-0"

MORGAN & ASSOCIATES, INC.
6806
PROFESSIONAL ENGINEER
STATE OF COLORADO

TRW CS-3

3650 north nevada avenue
colorado springs, colorado 80907

STATE OF COLORADO
WALLACE, JR.
B-280
LICENSED ARCHITECT

john james wallace & associates
architects a.i.a.
102 north cascade avenue, 300
colorado springs, colorado 80903
telephone : 303-632-2623

drawing title: PARTIAL FDN. PLAN

drawn: P.J.

checked: MG

issued: JAN. 19, 1981

revised:

jjwa 7904

drawing S1 of 10

FOOTING SCHEDULE

MARK	SIZE	REINFORCING
A	2'-0" SQ. x 1'-0" DP.	NONE
B	3'-0" SQ. x 1'-6" DP.	4-#4 EA. WAY BTM.
C	3'-6" SQ. x 1'-6" DP.	5-#4 " "
D	4'-0" SQ. x 1'-0" DP.	6-#4 " "
E	4'-6" SQ. x 1'-6" DP.	6-#4 " "
F	5'-0" SQ. x 1'-0" DP.	5-#5 " "
G	5'-6" SQ. x 1'-6" DP.	6-#5 " "
H	6'-0" SQ. x 1'-6" DP.	7-#5 " "
I	6'-6" SQ. x 1'-6" DP.	8-#5 " "
J	7'-0" SQ. x 1'-6" DP.	9-#5 " "
K	7'-6" SQ. x 1'-6" DP.	7-#6 " "
L	8'-0" SQ. x 1'-8" DP.	9-#6 " "
M	8'-6" SQ. x 1'-8" DP.	8-#7 " "
N	9'-0" SQ. x 1'-8" DP.	10-#7 " "
P	10'-0" SQ. x 2'-0" DP.	11-#7 EA. WAY BTM.

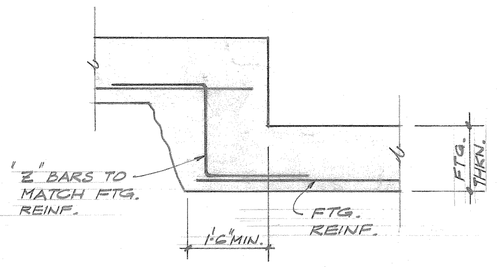

TYP. STEP FTG. DET.

5 / S-2 1/2" = 1'-0"

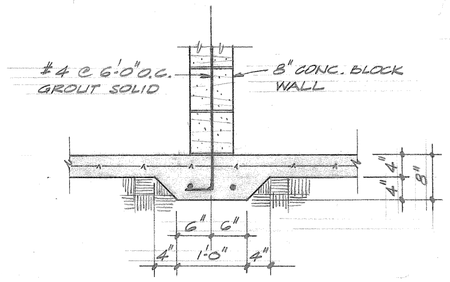

TYP. THICKENED SLAB DET. AT NON-LOAD BRG. INTERIOR MASONRY WALL (8" WALLS ONLY)

SEE ARCH. DWGS. FOR WALL LOCATION

4 / S-2 3/4" = 1'-0"

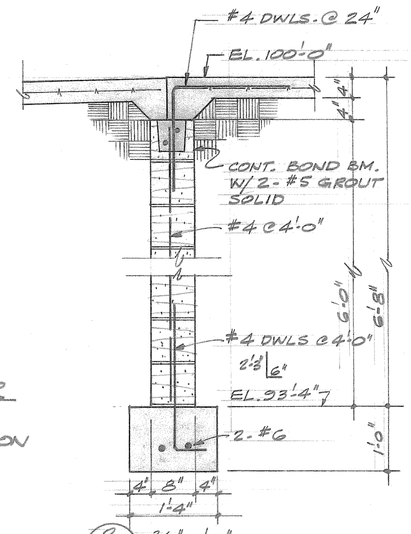

3 / S-2 3/4" = 1'-0"

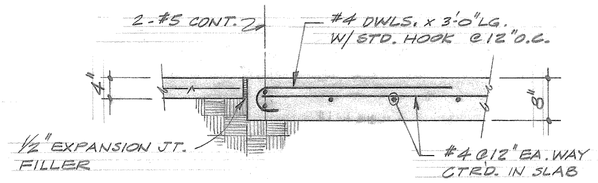

2 / S-2 3/4" = 1'-0"

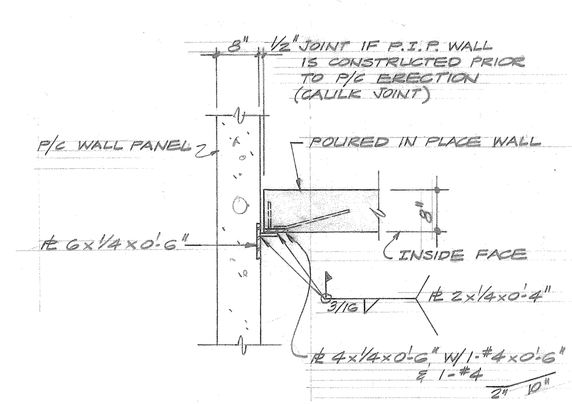

NOTE: COAT CONN. BELOW GRADE W/ ASPHALTIC COATING (ROOFING TAR) CONN. @ 4'-0" O.C. (2 CONN. MIN. PER PANEL)

1 / S-2 3/4" = 1'-0"

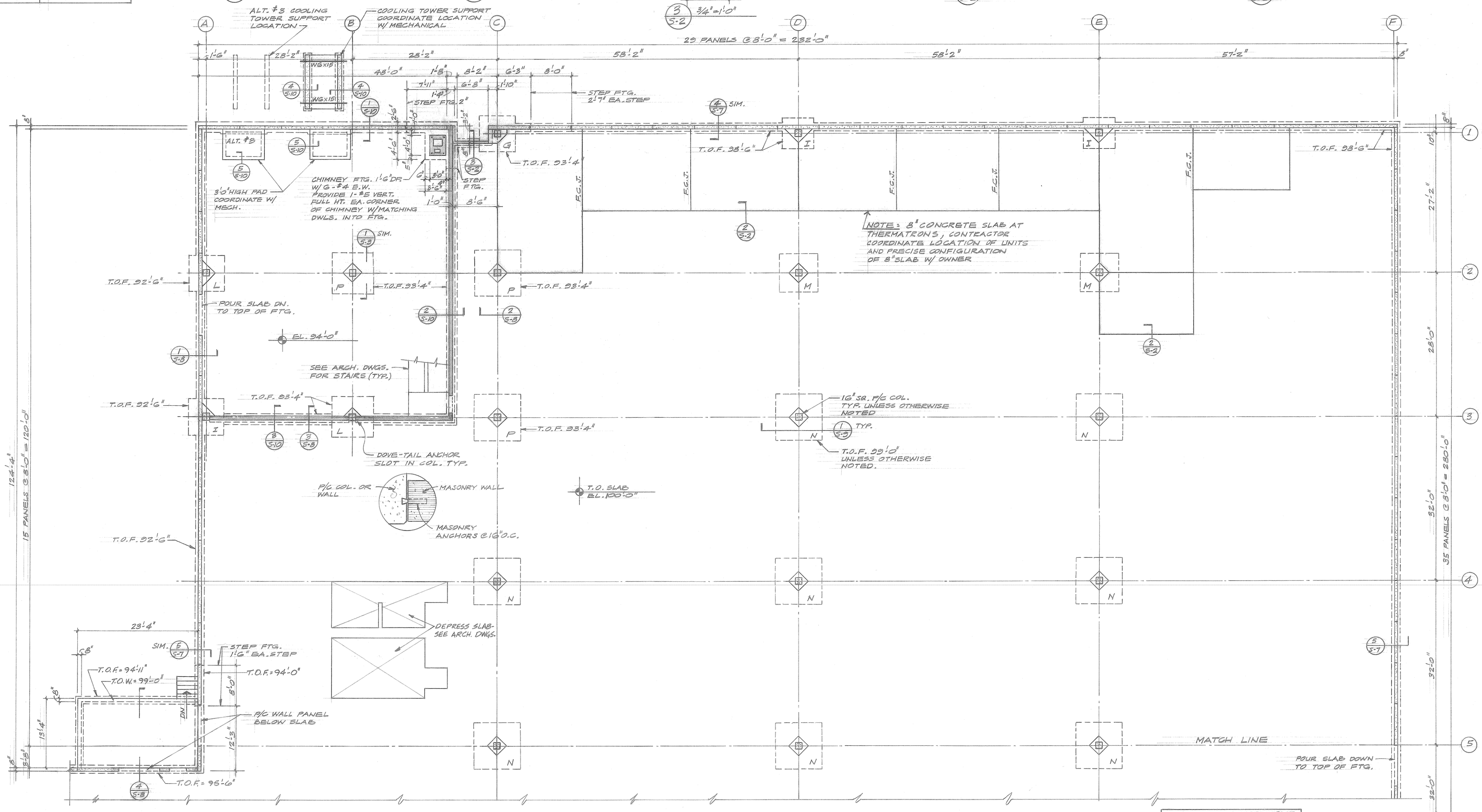

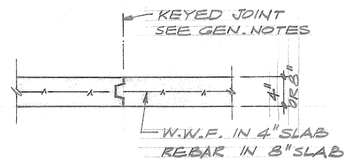

FLOOR CONSTRUCTION JT. DET.

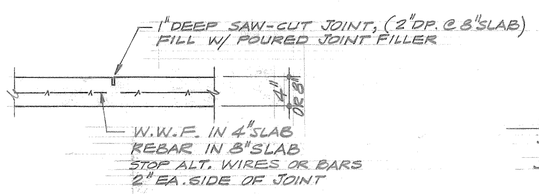

FLR. CONTROL JT. DET.

PARTIAL FOUNDATION PLAN

SCALE: 1/8" = 1'-0"

SEE SHT. S-1 FOR NOTES

MORGAN & ASSOCIATES, INC.
6806
STATE OF COLORADO
REGISTERED ARCHITECT

TRW CS-3
3650 north nevada avenue
colorado springs, colorado 80907

JOHN A. WALLACE
B-280
LICENSED ARCHITECT

john james wallace & associates
architects a.i.a.
102 north cascade avenue, 300
colorado springs, colorado 80903
telephone : 303-632-2623

drawing title: PARTIAL FDN. PLAN AND FTG. SCHEDULE

drawn: PT

checked: MG

issued: JAN. 10, 1981

revised:

jjwa 7904

drawing s2 of 10

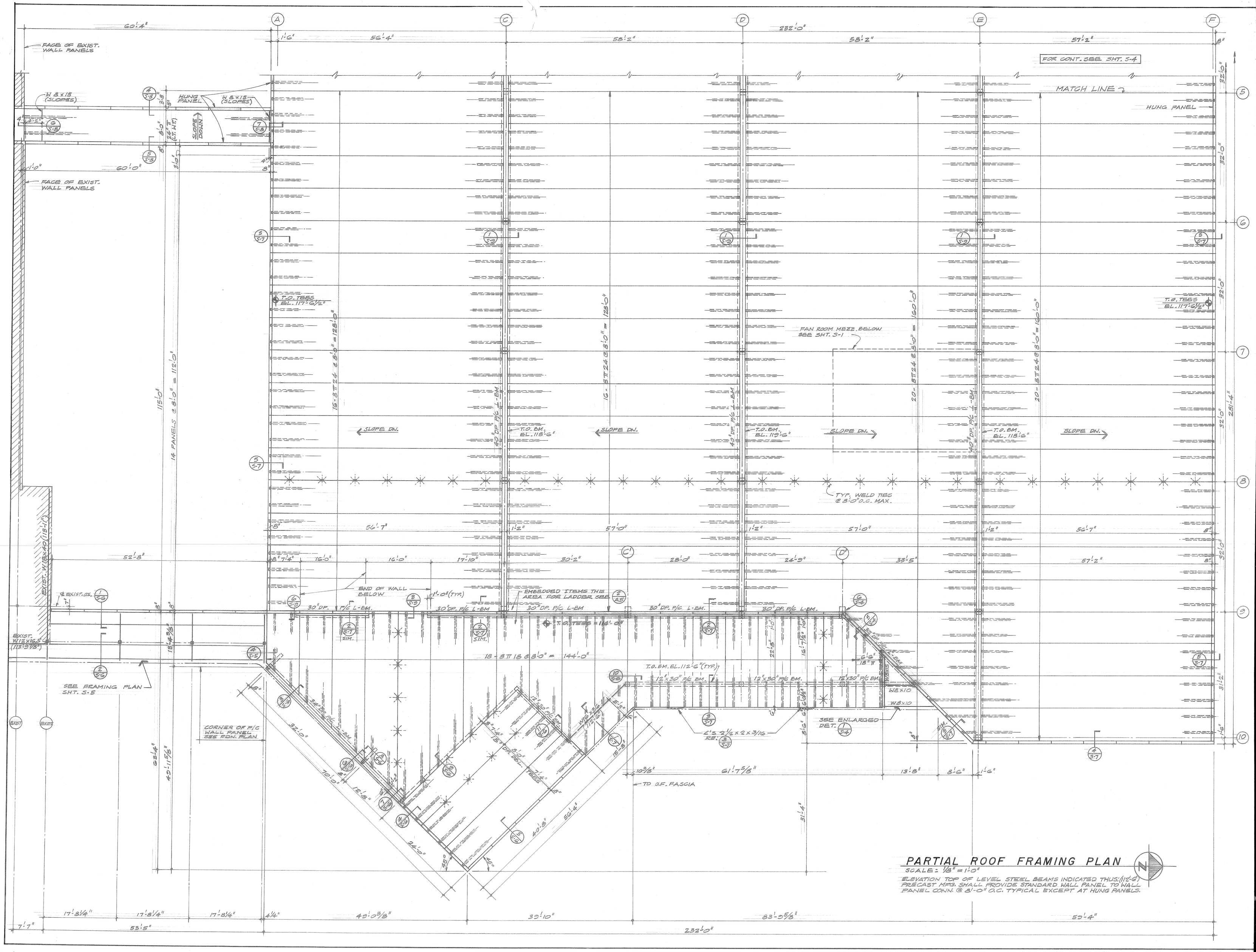

PARTIAL ROOF FRAMING PLAN

SCALE: 1/8" = 1'-0"

ELEVATION TOP OF LEVEL STEEL BEAMS INDICATED THUS: (112'-6")
PRECAST MFG. SHALL PROVIDE STANDARD WALL PANEL TO WALL PANEL CONN. @ 8'-0" O.C. TYPICAL EXCEPT AT HUNG PANELS.

MORGAN & ASSOCIATES, INC.
REGISTERED ARCHITECTS
6806
STATE OF COLORADO

TRW CS-3

3650 north nevada avenue
colorado springs, colorado 80907

STATE OF COLORADO
JOHN JAMES WALLACE, JR.
B-280
LICENSED ARCHITECT

john james wallace & associates
a.i.a.
architects
102 north cascade avenue, 300
colorado springs, colorado 80903
telephone : 303-632-2623

drawing title: PARTIAL ROOF FRAMING PLAN

drawn: PJ

checked: MG

issued: JAN 19, 1981

revised:

jjwa 7904

drawing s3 of 10

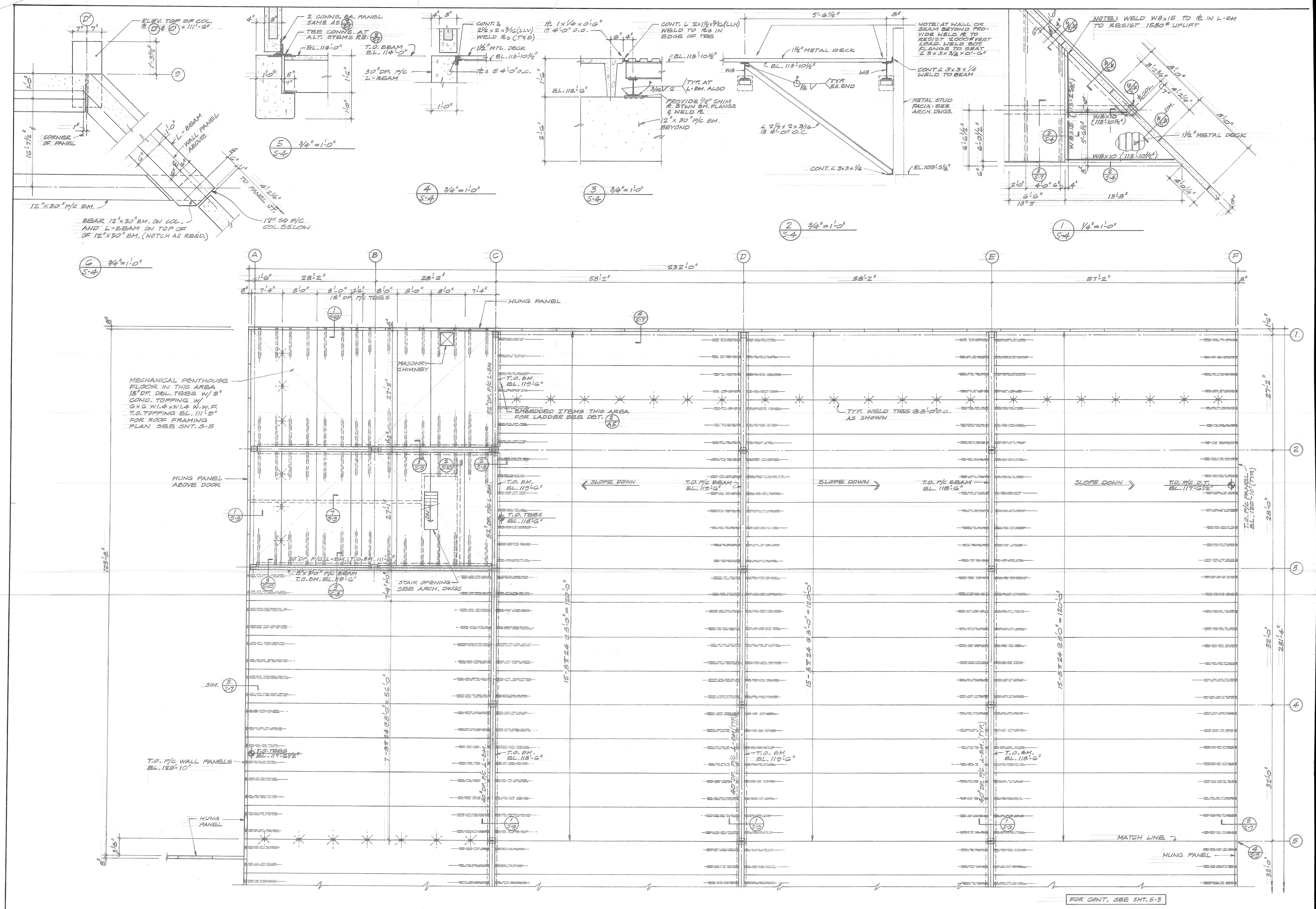

PARTIAL ROOF FRAMING PLAN
SCALE: 1/8"=1'-0"

MORGAN & ASSOCIATES, INC.
STRUCTURAL ENGINEERS
6806
STATE OF COLORADO
REGISTERED PROFESSIONAL ENGINEER
DATE 1-19-81

TRW CS-3

3650 north nevada avenue
colorado springs, colorado 80907

STATE OF COLORADO
REGISTERED ARCHITECT
B-280

john james wallace & associates
architects a.i.a.
102 north cascade avenue, 300
colorado springs, colorado 80903
telephone : 303-632-2623

drawing title: PARTIAL ROOF FRAMING PLAN AND DETAILS

drawn: PJ

checked: MG

issued: JAN. 19, 1981

revised:

jjwa 7904

drawing s4 of 10

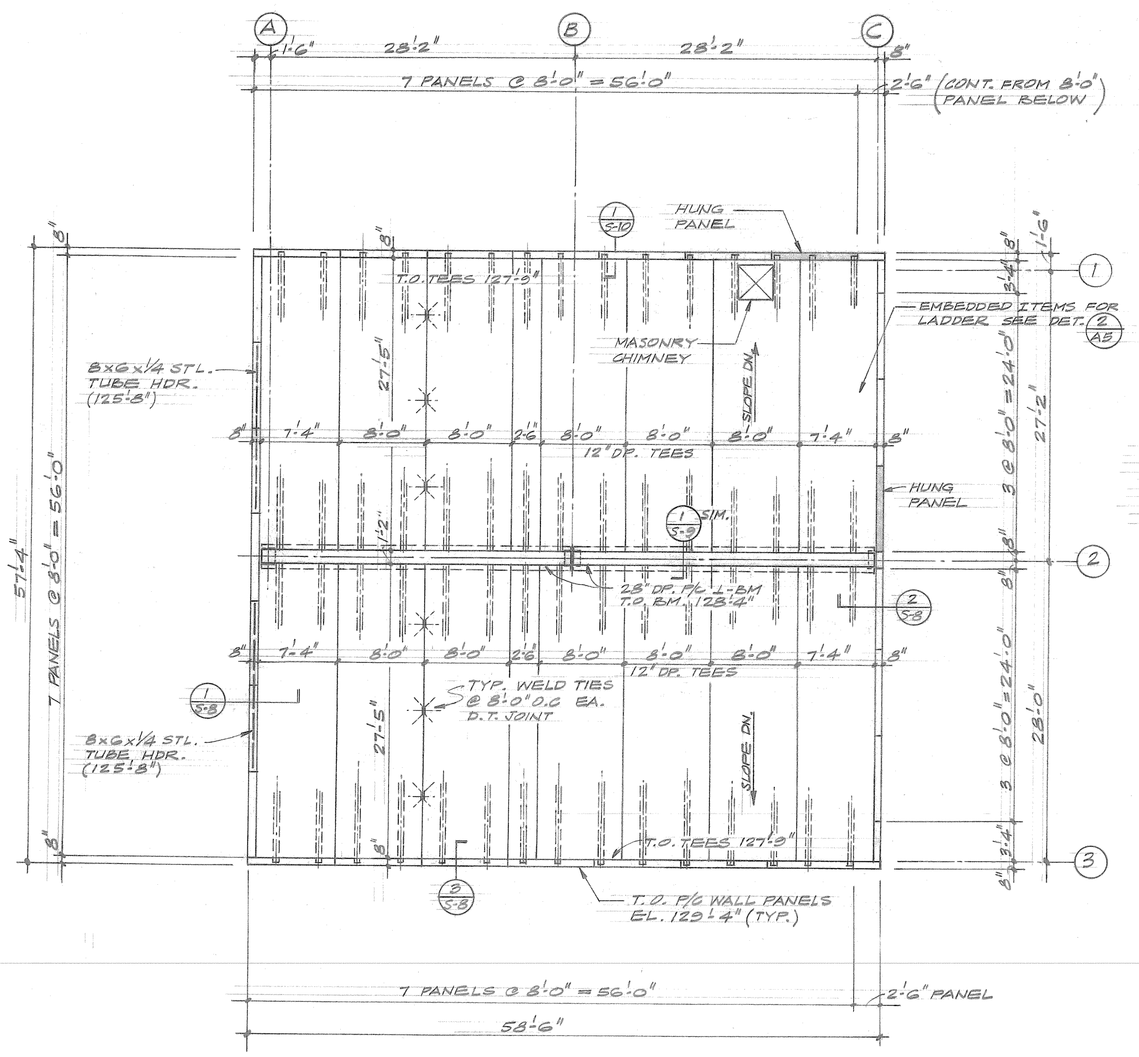

PENTHOUSE ROOF FRAMING PLAN

SCALE: 1/8" = 1'-0"

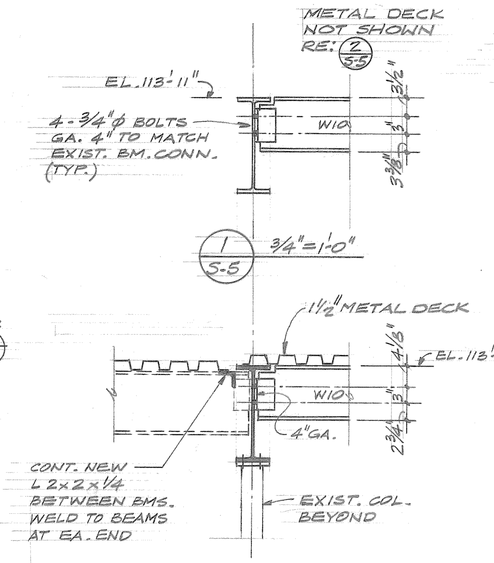

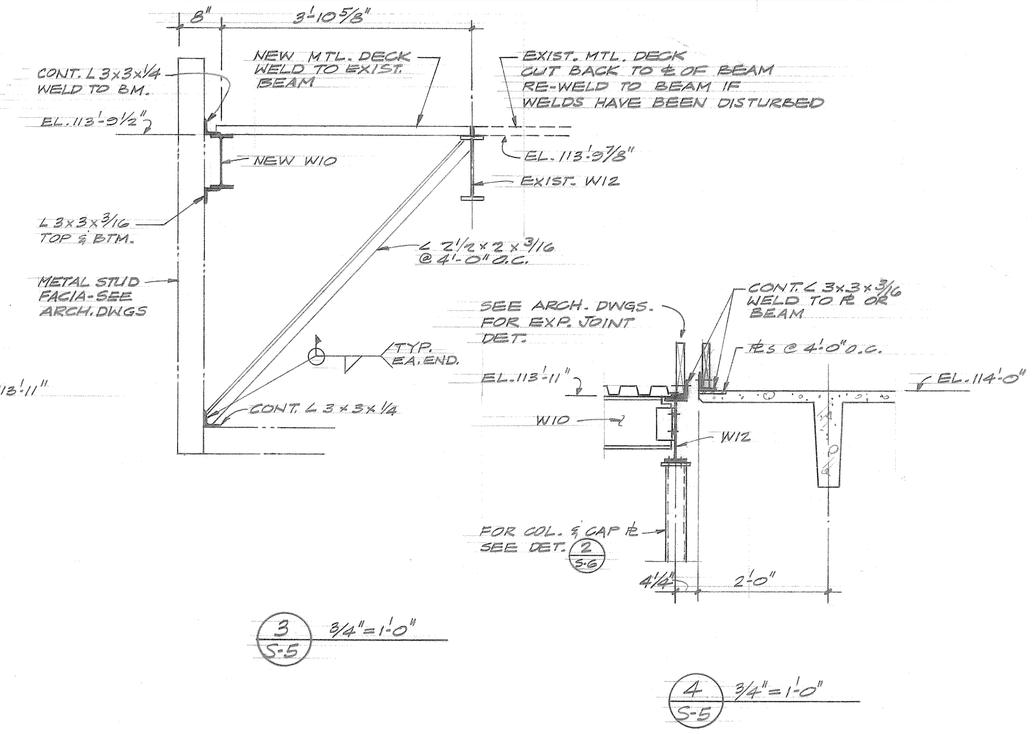

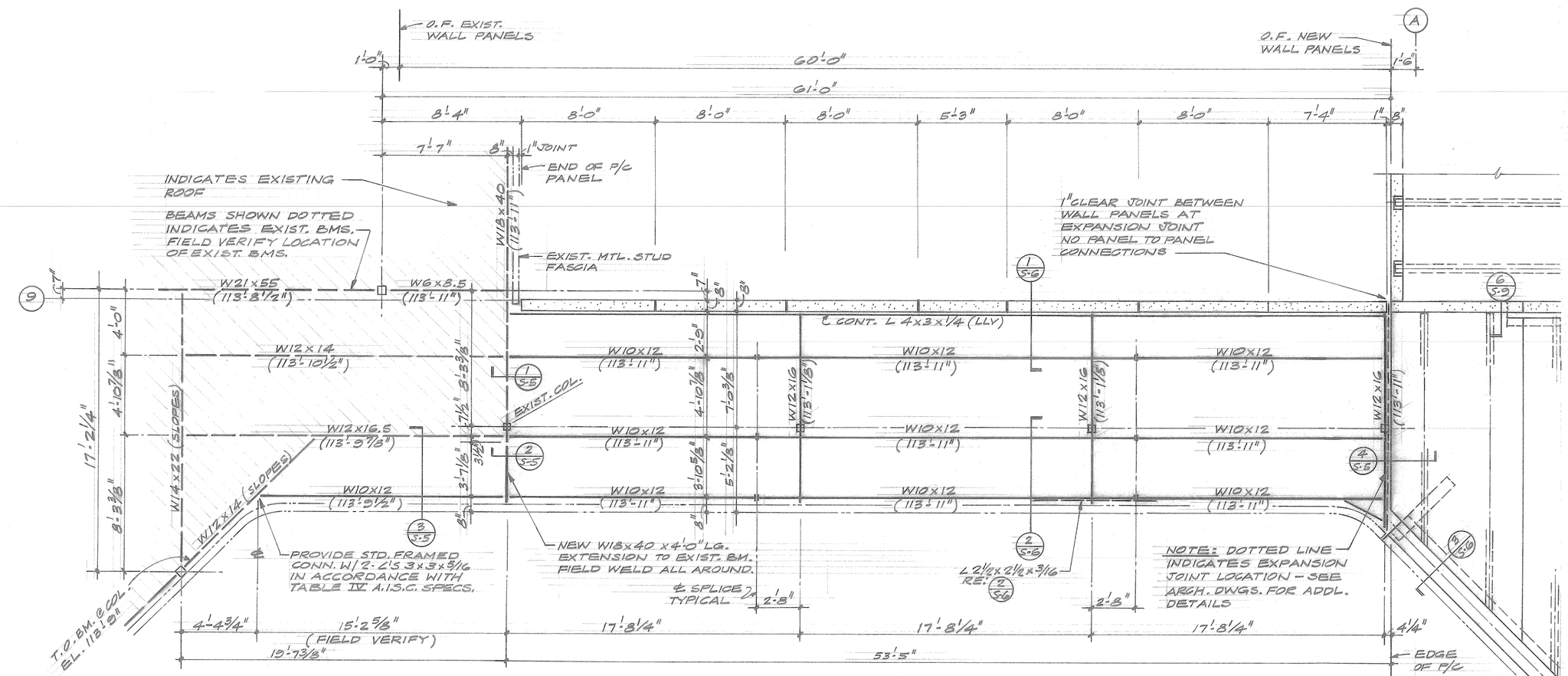

ARCADE ROOF FRAMING PLAN

SCALE: 1/4" = 1'-0"

ELEVATION TOP OF LEVEL STEEL BEAMS INDICATED THUS: (113'-11")
ROOF DECK IS 1 1/2", 22 GA. STEEL DECK, SEE SPECIFICATIONS

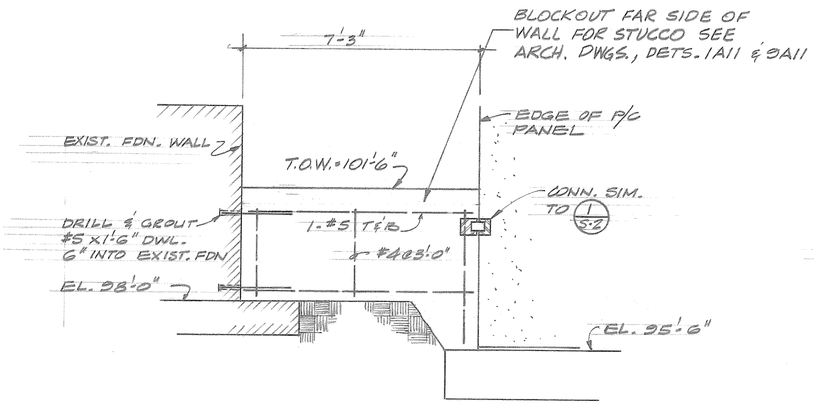

5/S-5 3/8" = 1'-0"

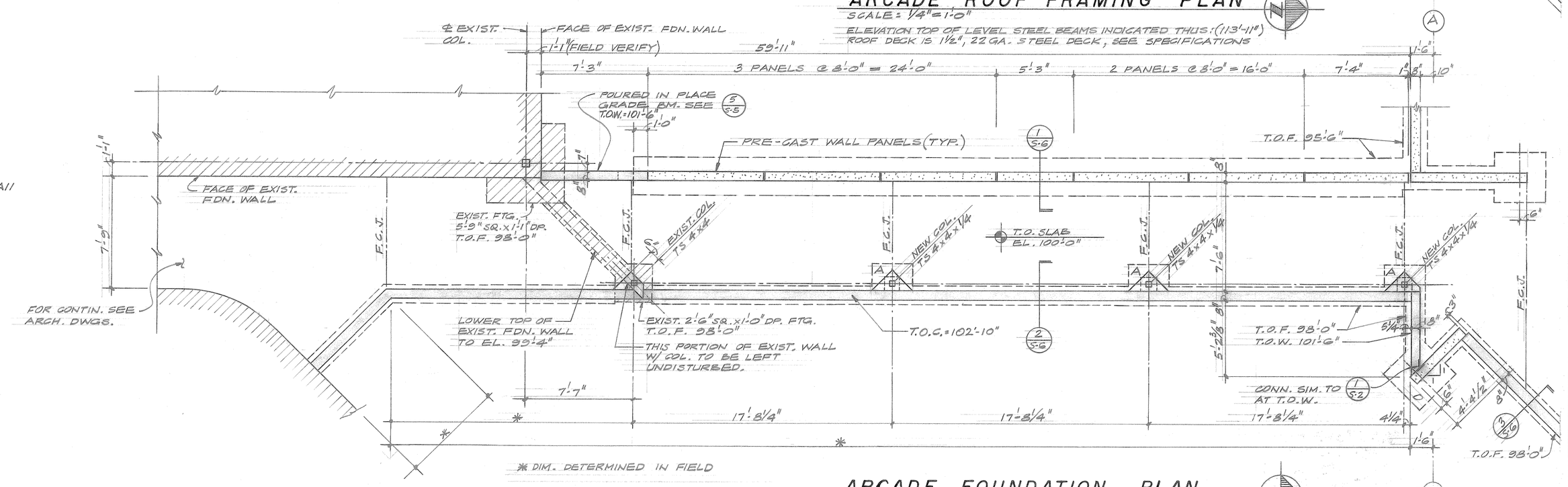

ARCADE FOUNDATION PLAN

SCALE: 1/4" = 1'-0"

SEE SHT. S-1 FOR NOTES

MORGAN & ASSOCIATES, INC. REGISTERED PROFESSIONAL ENGINEER 6806 STATE OF COLORADO

STATE OF COLORADO JOHN JAMES WALLACE JR. B-280 LICENSED ARCHITECT

TRW CS-3

3650 north nevada avenue
colorado springs, colorado 80907

john james wallace & associates
architects a.i.a.
102 north cascade avenue, 300
colorado springs, colorado 80903
telephone 303-632-2623

drawing title: PENTHOUSE & ARCADE PLANS AND DETAILS

drawn: PJ

checked: MG

issued: JAN. 19, 1981

revised:

jjwa 7904

drawing S5 of 10

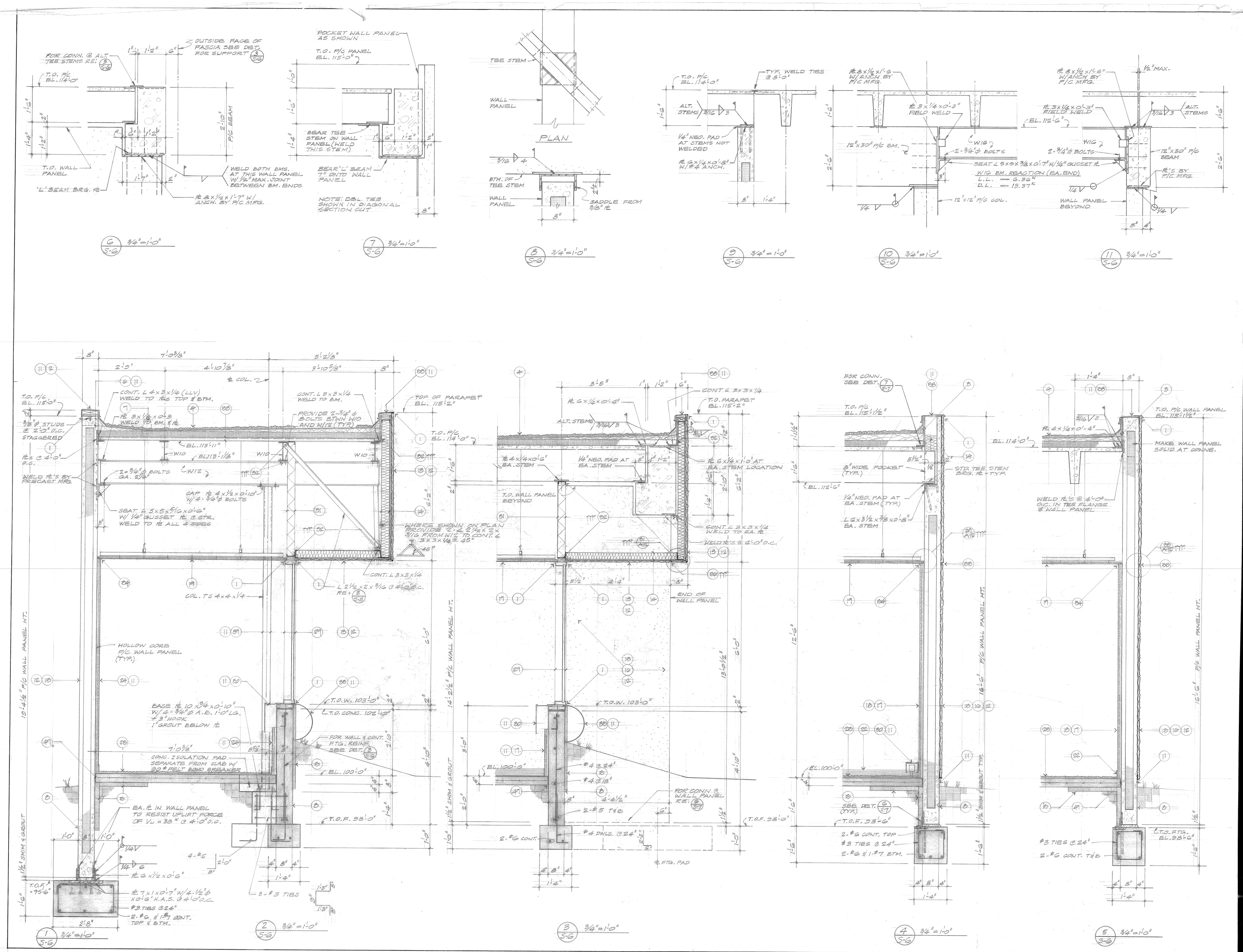

MORGAN & ASSOCIATES, INC.
REGISTERED PROFESSIONAL ENGINEER 6806 STATE OF COLORADO

TRW CS-3

3650 north nevada avenue
colorado springs, colorado 80907

LICENSED ARCHITECT JOHN JAMES WALLACE, JR. B-280

john james wallace & associates
architects a.i.a.
102 north cascade avenue, 300
colorado springs, colorado 80903
telephone . . . 303-632-2623

drawing title: DETAILS

drawn: PJ

checked: MG

issued: JAN. 12, 1981

revised:

jjwa 7904

drawing s6 of 10

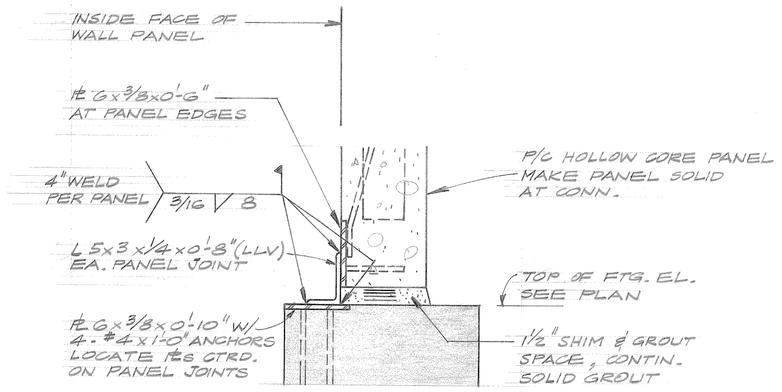

NOTE: COAT ENTIRE CONNECTION WITH HOT ASPHALT AND ENCASE WITH CONCRETE

6 / 5-7 TYP. PANEL TO FTG. CONN.
1 1/2" = 1'-0"

NOTE: ALL EMBEDDED PLs IN POURED IN PLACE CONRETE REQ'D. FOR PRE-CAST TO BE SUPPLIED BY PRE-CAST MFG.

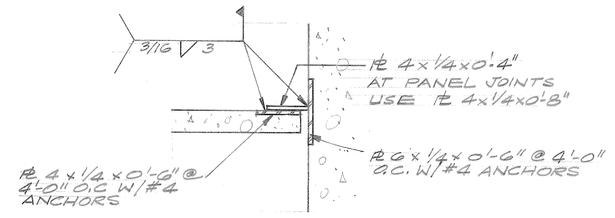

NOTE: TENSION TIE NOT SHOWN

7 / 5-7 TYP. TEE TO LOAD BRG. WALL CONN.
1 1/2" = 1'-0"

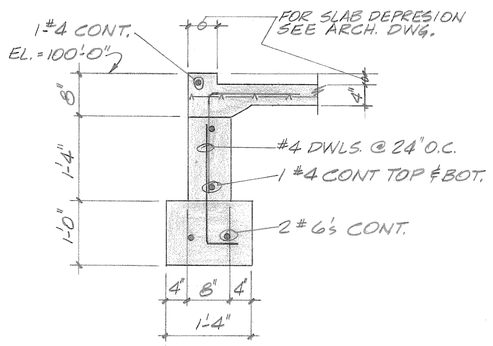

8 / 5-7 3/4" = 1'-0"

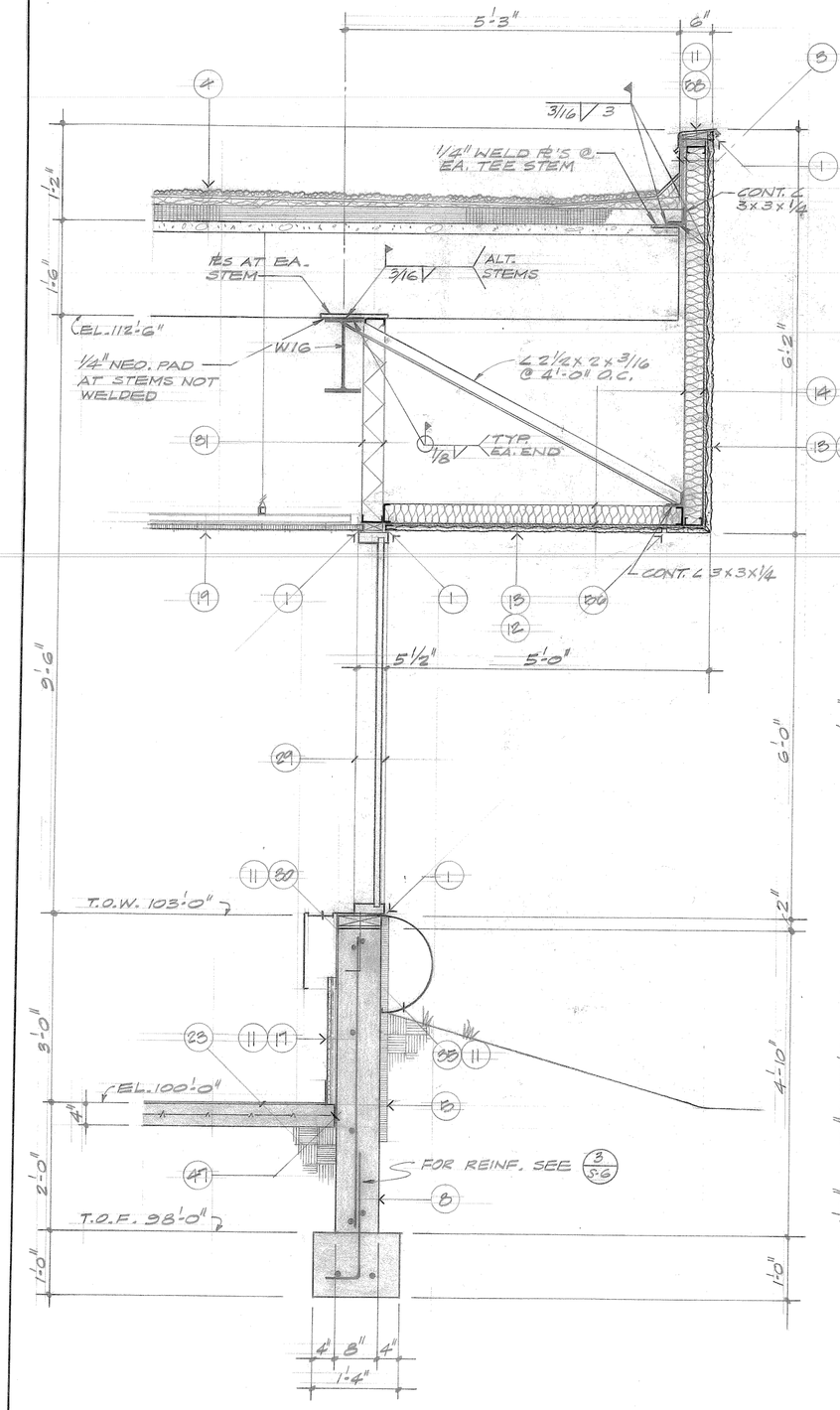

1 / 5-7 3/4" = 1'-0"

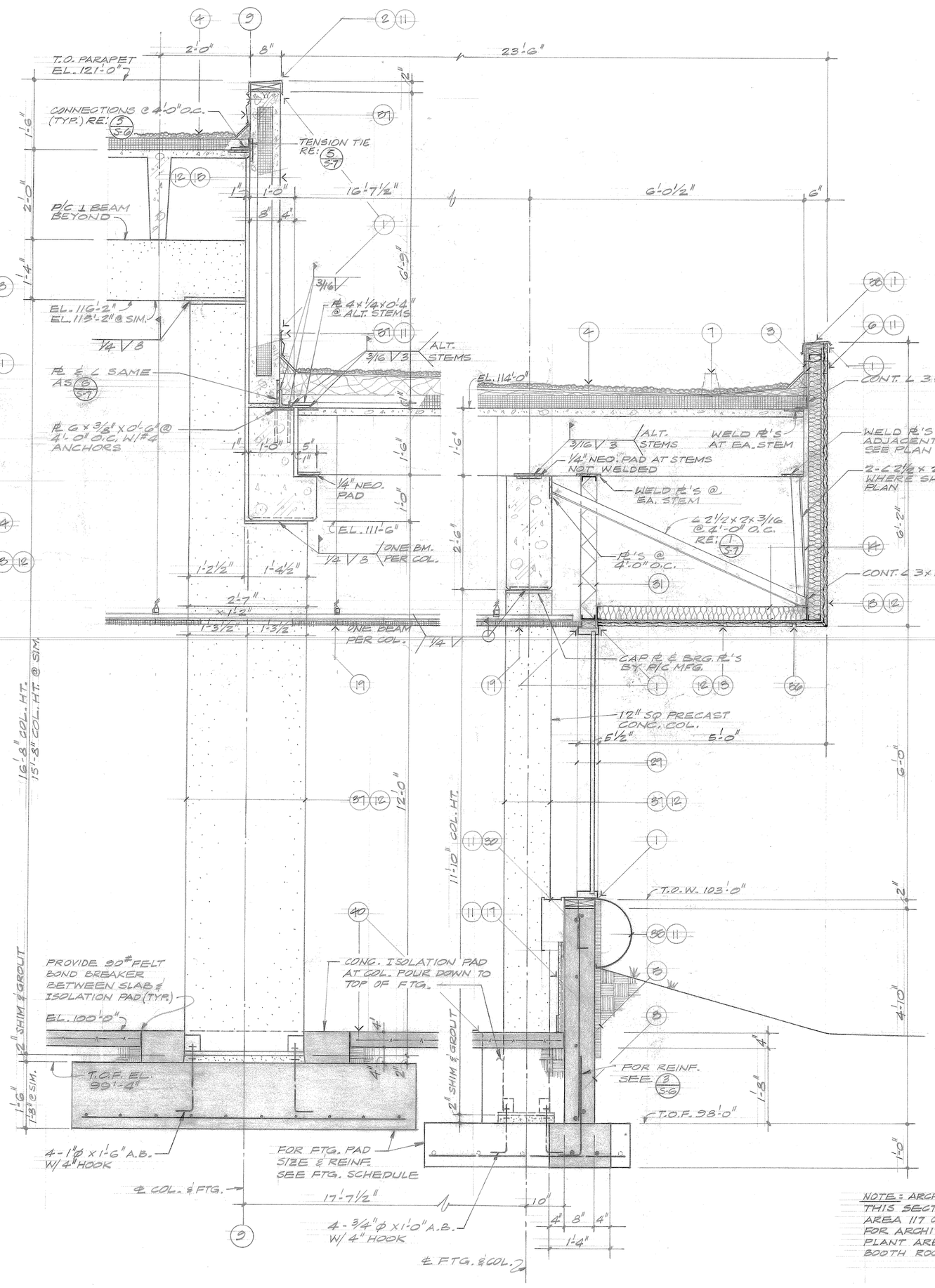

2 / 5-7 3/4" = 1'-0"

3 / 5-7 3/4" = 1'-0"

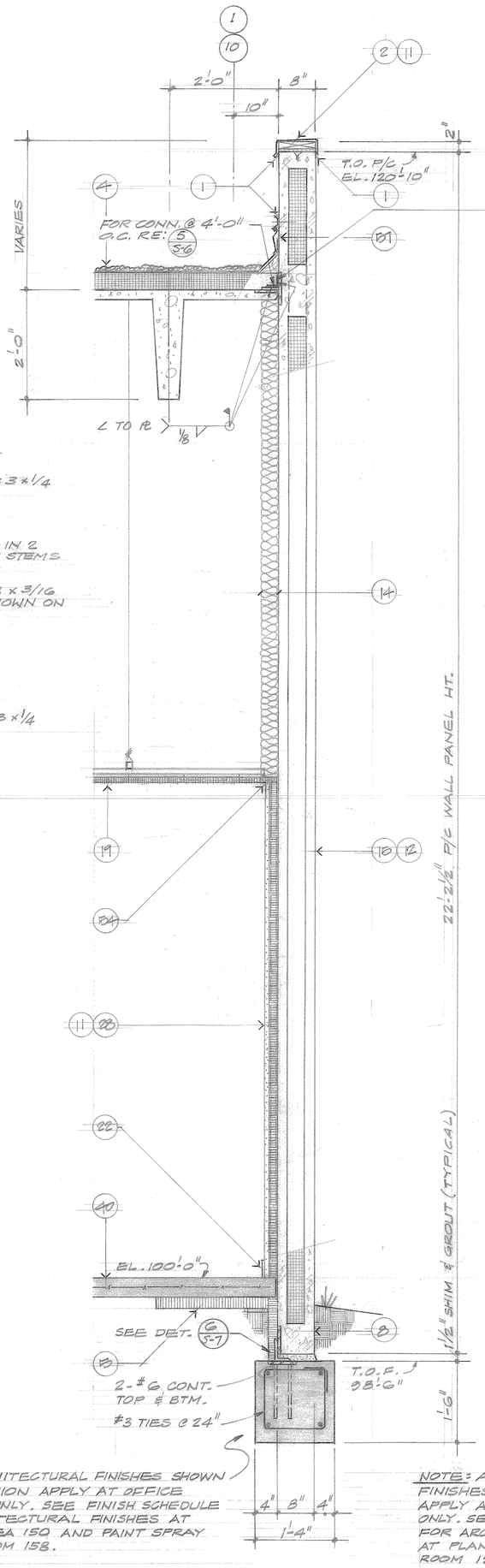

NOTE: ARCHITECTURAL FINISHES SHOWN THIS SECTION APPLY AT OFFICE AREA 117 ONLY. SEE FINISH SCHEDULE FOR ARCHITECTURAL FINISHES AT PLANT AREA 150 AND PAINT SPRAY BOOTH ROOM 158.

4 / 5-7 3/4" = 1'-0"

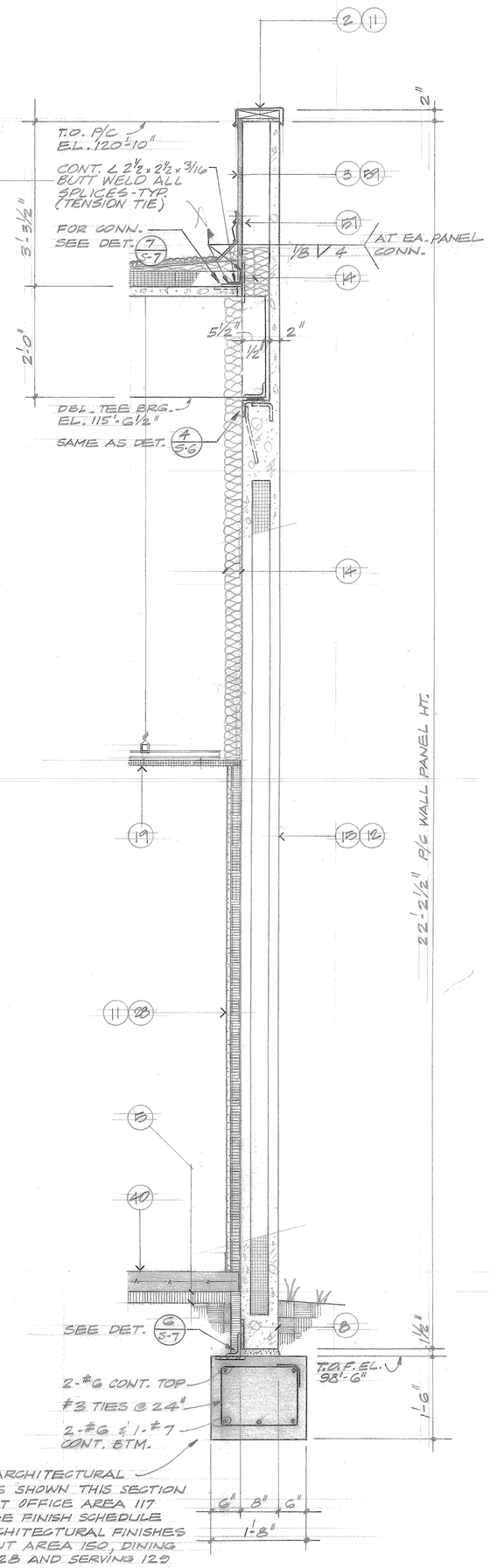

NOTE: ARCHITECTURAL FINISHES SHOWN THIS SECTION APPLY AT OFFICE AREA 117 ONLY. SEE FINISH SCHEDULE FOR ARCHITECTURAL FINISHES AT PLANT AREA 150, DINING ROOM 128 AND SERVING 129

5 / 5-7 3/4" = 1'-0"

BURGUM & ASSOCIATES, INC. STRUCTURAL ENGINEERS 6806 STATE OF COLORADO

TRW CS-3

3650 north nevada avenue
colorado springs, colorado 80907

STATE OF COLORADO PAUL J. WALLACE, JR. B-280 LICENSED ARCHITECT

john james wallace & associates
architects a.i.a.
102 north cascade avenue, 300
colorado springs, colorado 80903
telephone . . . 303-632-2623

drawing title: DETAILS

drawn: PJ

checked: MG

issued: JAN. 19, 1981

revised:

jjwa 7904

drawing s7 of 10

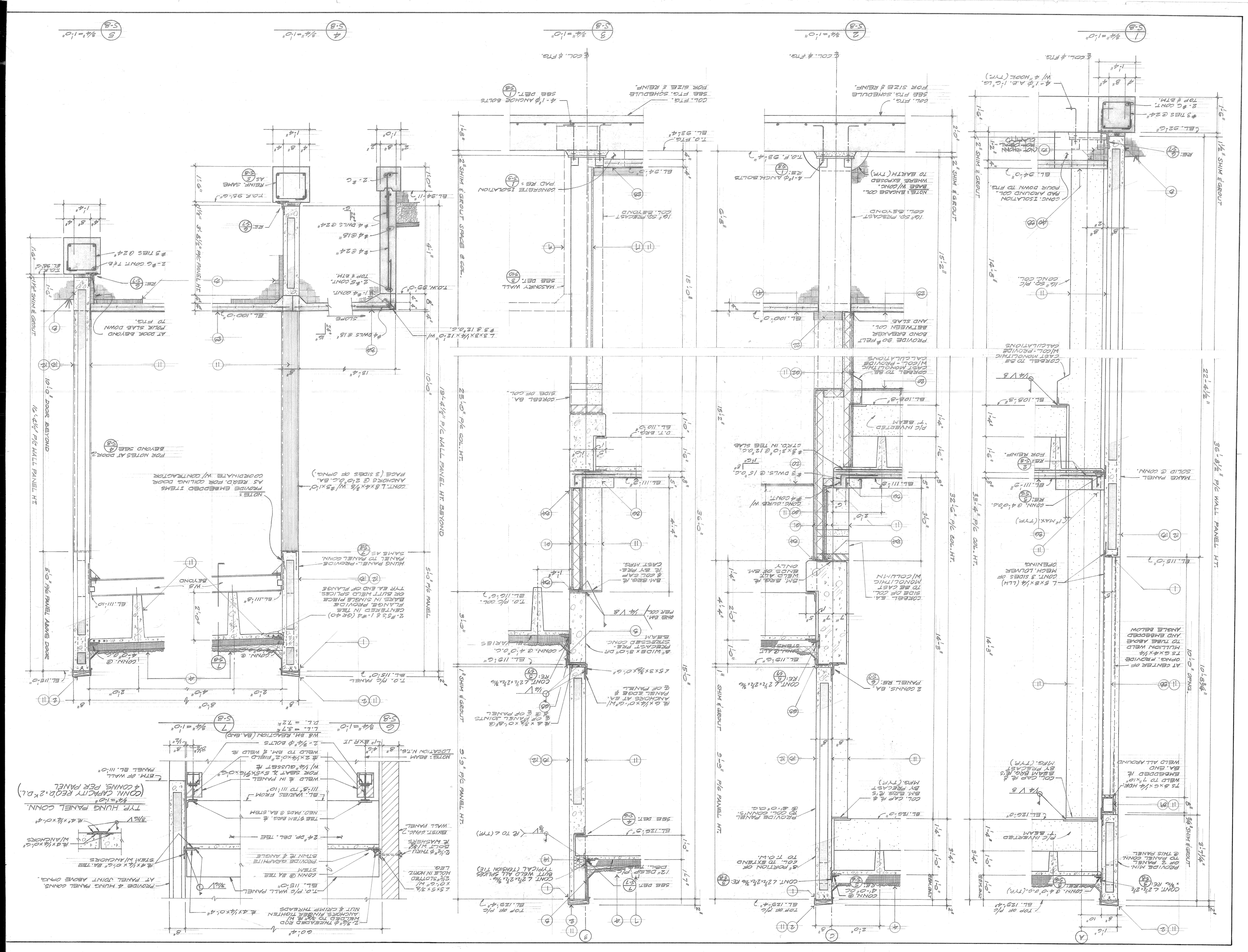
1 S-8 3/4"=1'-0"
2 S-8 3/4"=1'-0"
3 S-8 3/4"=1'-0"
4 S-8 3/4"=1'-0"
5 S-8 3/4"=1'-0"
6 S-8 3/4"=1'-0"
7 S-8 3/4"=1'-0"
22'-4 1/2" P/C WALL PANEL HT.
36'-8 1/2" P/C WALL PANEL HT.
32'-6" P/C COL. HT.
36'-0"
22'-0" P/C COL. HT.
19'-4 1/2" P/C WALL PANEL HT. BEYOND
5'-0" P/C PANEL
5'-0" P/C PANEL ABOVE DOOR
10'-0" DOOR BEYOND
16'-4 1/2" P/C WALL PANEL HT.
3'-9" P/C PANEL HT.
3'-3" P/C PANEL HT.
1 1/2" SHIM & GROUT
2" SHIM & GROUT
1" SHIM & GROUT
3/4" SHIM & GROUT
TRW CS-3
3650 north nevada avenue
colorado springs, colorado 80907
drawing title: DETAILS
drawn: PJ
checked: MG
issued: JAN. 19, 1981
revised:
jjwa 7904
drawing s8 of 10
john james wallace & associates a.i.a.
architects
102 north cascade avenue, suite 300
colorado springs, colorado 80903
telephone 303-632-2623
MORGAN & ASSOCIATES, INC.
6906
B-280

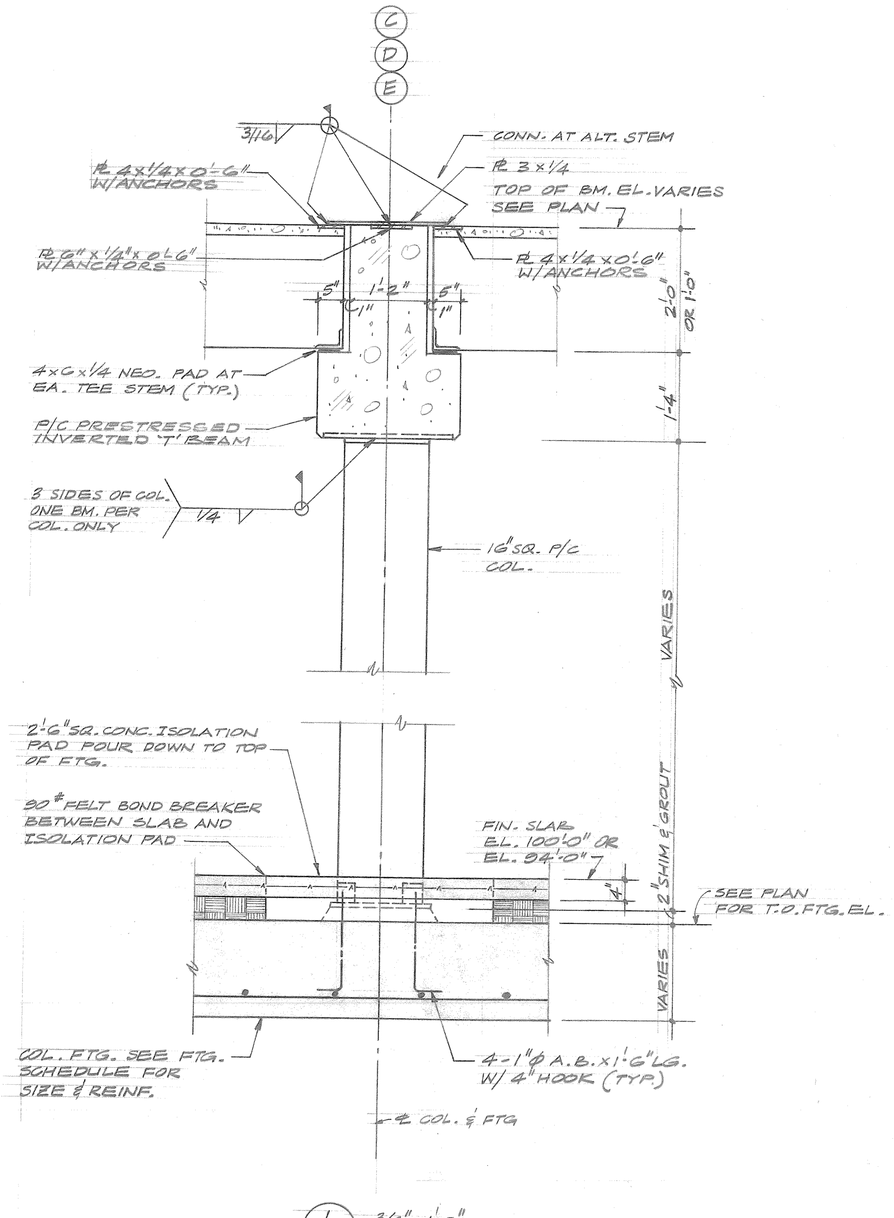

1 / S-9 3/4" = 1'-0"

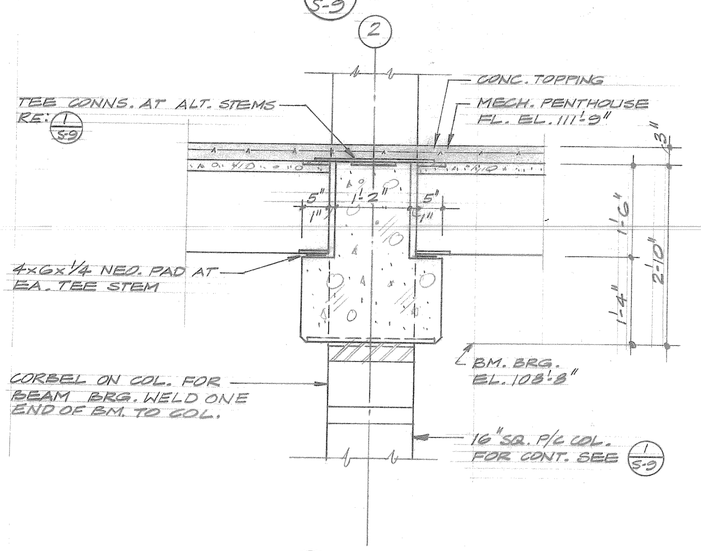

5 / S-9 3/4" = 1'-0"

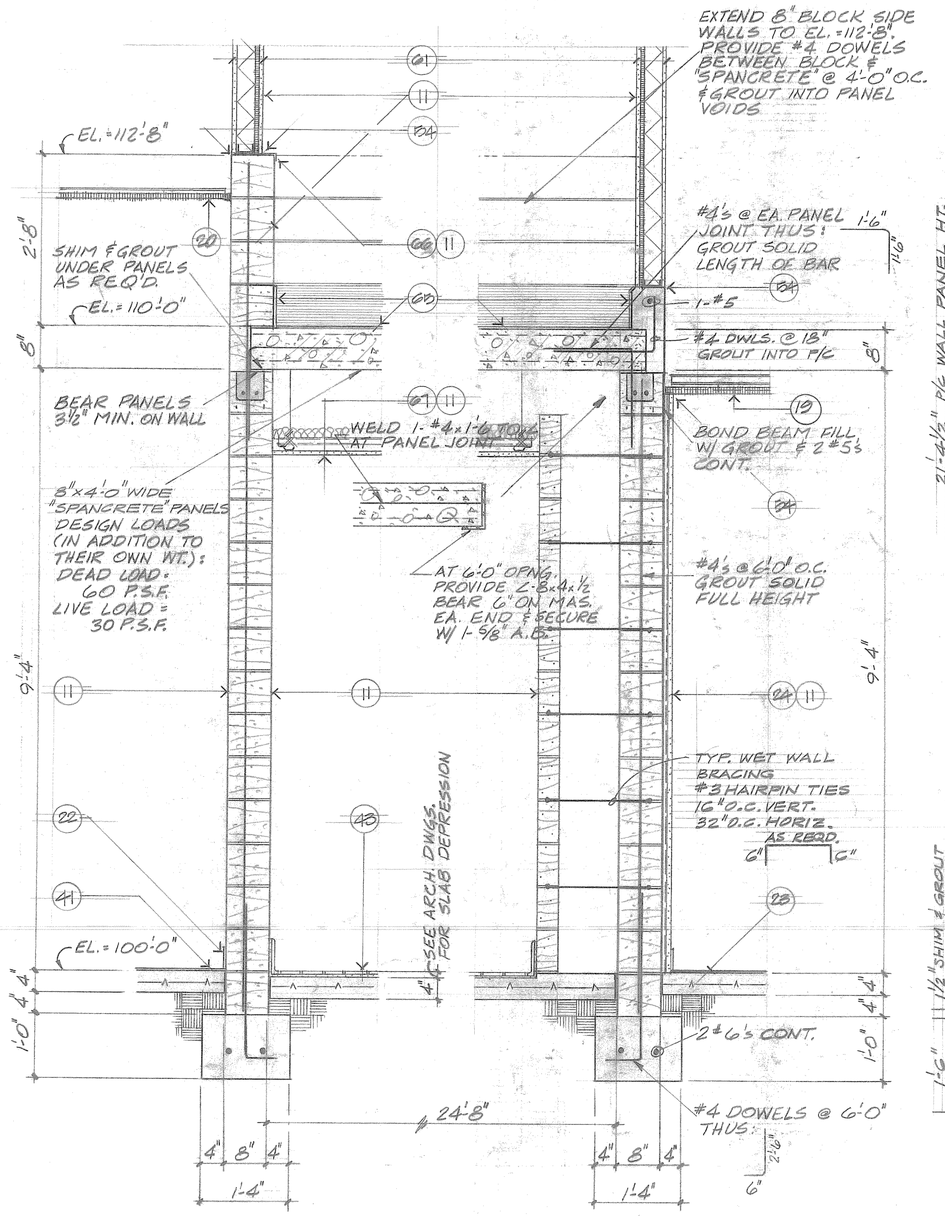

2 / S-9 3/4" = 1'-0"

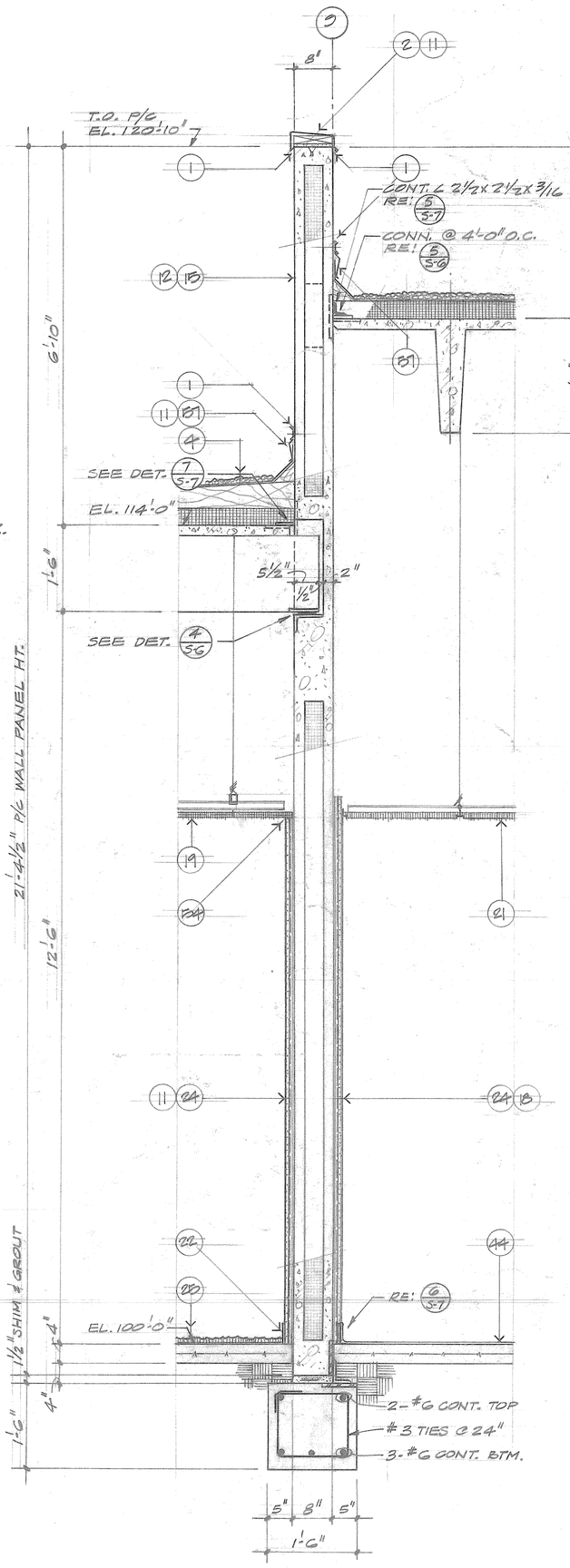

3 / S-9 3/4" = 1'-0"

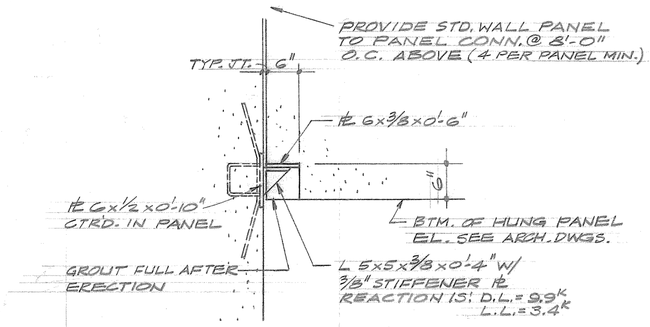

TYP. DET. AT LOAD BEARING HUNG PANEL

4 / S-9 3/4" = 1'-0"

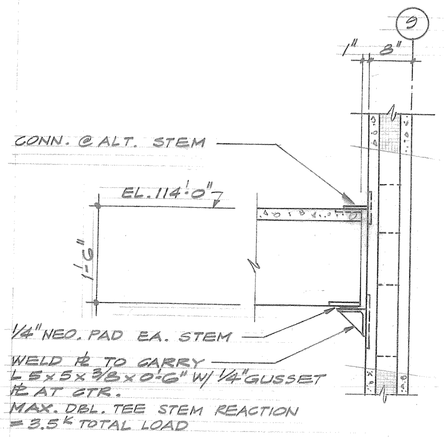

6 / S-9 3/4" = 1'-0"

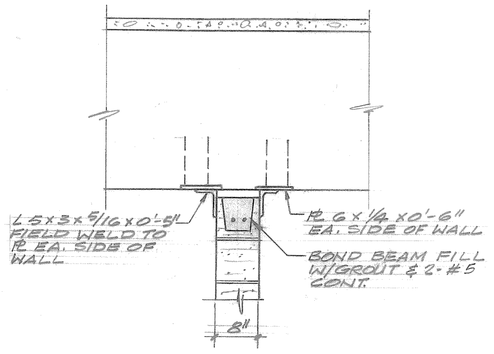

7 / S-9 TYP. NON-LOAD BRG. WALL SUPPORT (NO CEILING) 3/4" = 1'-0"

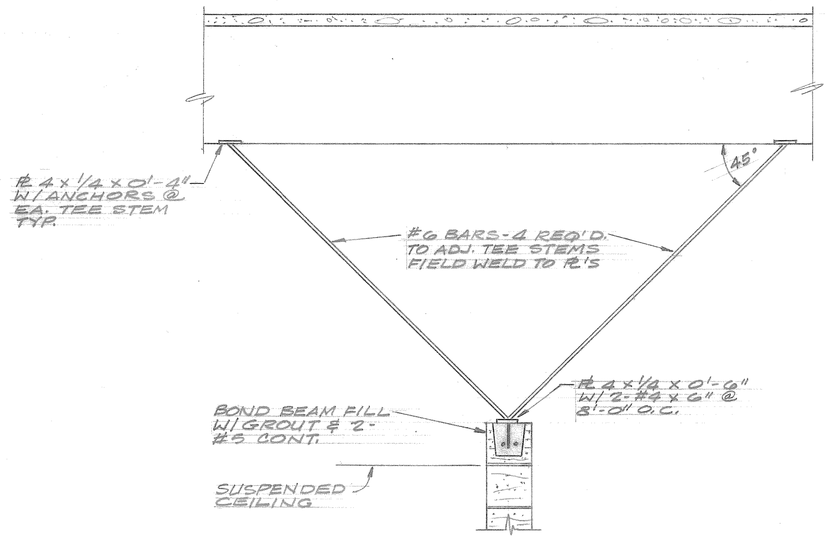

8 / S-9 TYP. NON-LOAD BRG. WALL SUPPORT (WITH CEILING) 3/4" = 1'-0"

MORGAN & ASSOCIATES, INC.
6806
STATE OF COLORADO
JOHN JAMES WALLACE, JR.
B-280
LICENSED ARCHITECT

TRW CS-3
3650 north nevada avenue
colorado springs, colorado 80907

john james wallace & associates
architects a.i.a.
102 north cascade avenue, 300
colorado springs, colorado 80903
telephone 303-632-2623

drawing title: DETAILS
drawn: PJ
checked: MG
issued: JAN. 19, 1981
revised:
jjwa 7904
drawing S9 of 10

21. All grout shall be poured in lifts of not more than 4'-0" and all grout shall be puddled or vibrated into place.

22. All corners shall be grouted solid.

23. Bond beams shall be filled with pea-gravel concrete, f'c=3,000 p.s.i. and shall be continuous around building.

24. See "Structural Steel" notes for steel lintel angles.

STRUCTURAL STEEL:

1. Structural steel shall conform to the A.I.S.C. Specifications, latest edition and the project specifications for design, fabrication and erection. All structural steel shall conform to A36, unless otherwise noted. Tube columns shall conform to ASTM A-53 steel.

2. Shop connections shall be welded and ground smooth where exposed. Field connections shall be made with 3/4" diameter bolts conforming to A307 unless otherwise noted.

3. Provide 1(one) shop coat of red lead primer for all structural steel unless noted.

4. Shop drawings shall be submitted in sepia along with 3 (three) prints

5. Metal roof deck shall be as noted on the structural drawings.

6. Refer to Architectural and Mechanical drawings for additional miscellaneous steel requirements.

7. At all openings in masonry unless noted otherwise, provide loose lintels as follows (bear 6" onto solid grouted masonry, 1 angle for each 4" of wall thickness): spans to 4'-0", angle 3½ x 3½ x ¼; spans 4'-0" to 6'-0" angle 4 x 3½ x 5/16 (L.L.V.)

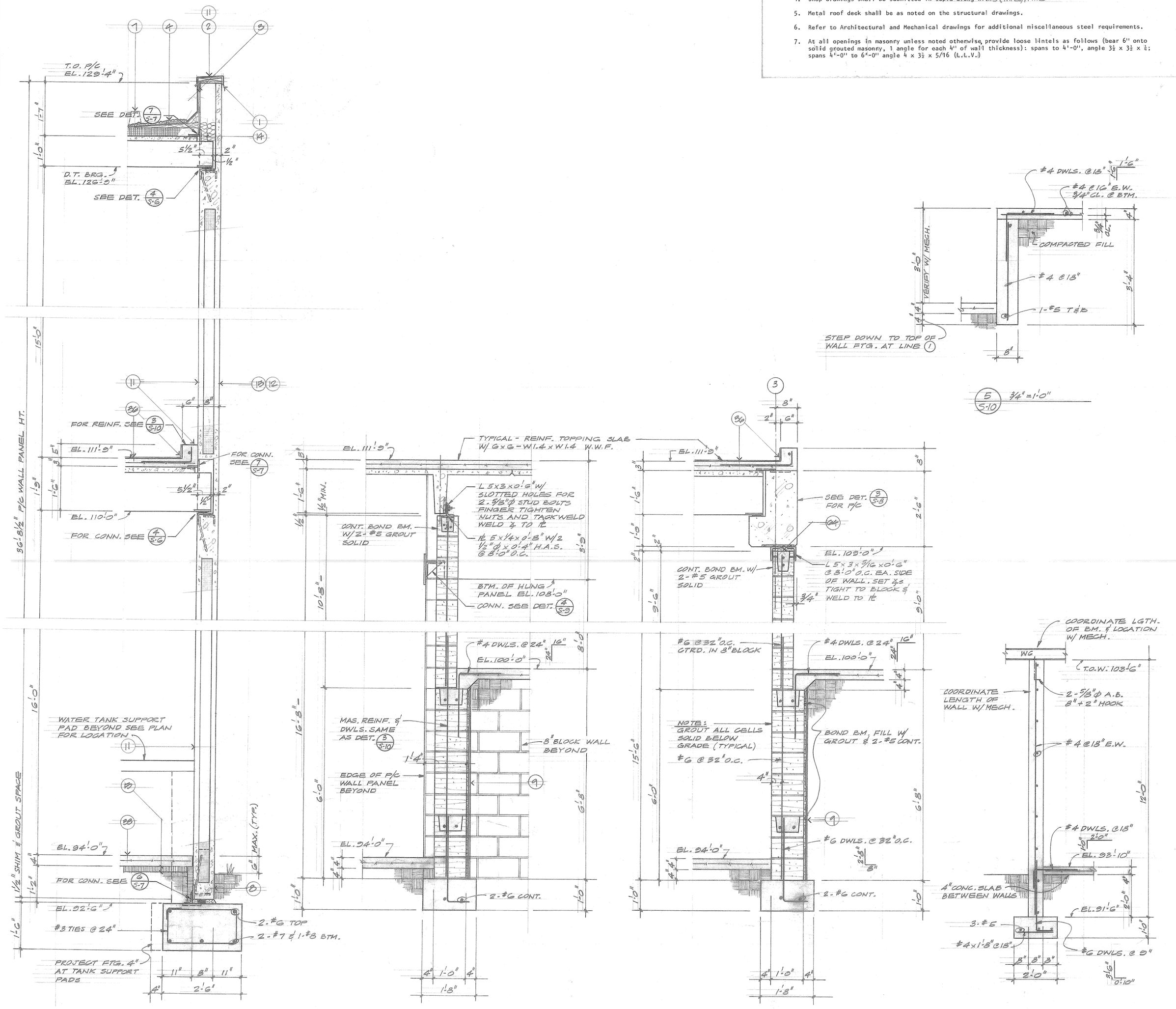

GENERAL NOTES

MISCELLANEOUS:

1. Foundation design is in accordance with report by Thomas Summerlee Inc. Number 2472, Dated September 19, 1979.

   Maximum allowable soil bearing pressure ---------- 3000 p.s.f.
   Minimum allowable soil bearing pressure ---------- 0 p.s.f.

2. Soil beneath footing shall be solid, undisturbed material, free of water and foreign debris, or structural fill compacted to 95% Standard Proctor Density, ASTM D-698.

3. Coordinate location of mechanical openings, floor drains, inserts, depressions, etc. with Architectural, Mechanical and Electrical drawings.

4. Design Live Loads - The Uniform Building Code 1979 edition was used to determine the minimum requirements unless otherwise noted.

   Snow ---------- 30 p.s.f.
   Wind (less than 30' in height)---------- 25 p.s.f.
   (30' to 49' in height) ---------- 30 p.s.f.
   Slab on grade (4") ---------- 100 p.s.f.
   Mechanical Penthouse Floor ---------- 30 p.s.f.
   Dead load Mechanical Units only ---------- 80 p.s.f.

5. Existing Work - Where new work joins existing, the Contractor shall check all conditions with Architect before starting new construction.

CONCRETE:

1. The Concrete work shall conform to ACI 318-77 and the project specifications for design, fabrication and construction.

2. Concrete shall have a minimum compressive strength in 28 days as follows:

   Footings and stem walls ---------- 3000 p.s.i. Cement Type I
   Slabs on grade ---------- 4000 p.s.i. Cement Type I
   Pre-stressed Concrete ---------- 5000 p.s.i. Cement Type I

3. All reinforcement bars shall be deformed billet steel A-615, Grade 60. Grade beam stirrups shall be deformed billet steel A-615, Grade 40.

4. Detail all reinforcement in accordance with ACI detailing manual, latest edition. Reinforcement shall be supported with metal chairs or hung from forms. Concrete, bricks, blocks, etc. shall not be used.

5. Control and/or Construction joints in slabs on grade shall be located as directed by Architect/Engineer and shall be spaced at intervals enclosing no more than 625 square feet with maximum of 25 feet in any one direction. All construction joints shall be formed with metal load key joint supplied by Jahn Concrete Forming Products or equal.

6. Continuous bars in walls, slabs and footings shall be lapped 36 bar diameters at splices.

7. At all corners and intersections provide corner bars having lap of 36 bar diameters with adjacent bars.

8. Place 2-#5 bars (one each face) with 2'-0" projection around all sides of all openings.

9. Place reinforcement so that concrete protection noted below is provided:

   Concrete surfaces poured against the ground ---------- 3" clear
   Formed surfaces exposed to ground or weather
   Bars #6 and larger ---------- 2" clear
   Bars #5 and smaller ----------1.5" clear
   Slabs on Grade ---------- wwf at center

10. Walls below grade are designed to be supported by the floor slabs on grade. Backfilling shall not be allowed until supporting diaphragms are in place or adequate shoring is provided.

11. Stem walls below grade shall have backfill placed equally on both sides until the required levels are reached.

12. Welded wire fabric shall be lapped a minimum of one full mesh and securely wired together.

13. Where all interior concrete slabs on grade abut walls supply a bond breaker of 30# felt between wall and edge of slab.

CONCRETE - PRECAST/PRESTRESSED:

1. Precast/Prestressed concrete shall be designed in accordance with ACI 318-77.

2. The fabricator shall design his standard units to support the live and dead loads indicated on the structural drawings. Three sets of design calculations for all precast/prestressed concrete members shall be submitted to the Architect for approval before any fabrication is started.

3. Concrete strength shall conform to the requirements for release strength and 28-day strength as shown in the approved design calculations but in no case shall the 28-day strength be less than 5,000 p.s.i. All concrete shall be stone concrete, unless indicated otherwise.

4. Lifting insert locations in wall panels shall be approved prior to fabrication.

MASONRY:

1. Design, fabrication and construction shall be in accordance with the Uniform Building Code, latest edition.

2. All hollow units (concrete) shall have a minimum f'm= 1350 p.si.

3. Type S mortar mix (1,800 p.s.i.) shall be in accordance with A.S.T.M. proportions as follows:

	Standard Mix	Alternate Mix
Parts by Volume of Portland Cement----------	1/2	1
Parts by Volume of Masonry Cement ----------	1 (Type II)	0
Parts by Volume of Hydrated Lime ----------	0	1/4 to 1/2
Aggregate, measured in a damp, loose condition ----------	Not less than 2-1/4 and not more than three times the sum of the volumes of the cements and lime used.	

   Mix proportions shall be tested and strictly enforced.

4. Unless otherwise noted, in hollow unit masonry there shall be full mortar coverage on the face shells and on the webs surrounding cells to be filled with grout. Vertical head joints shall be buttered well for a thickness equal to the face shell of the unit.

5. Horizontal wire reinforcement shall be placed continuous in bed joints at 16" o.c. vertical spacing. Nominal width of joint reinforcement shall be nominal width of block unit and as detailed.

6. Additional horizontal wire reinforcement shall be placed in first bed joint above and below openings and shall extend 24" beyond edges of openings.

7. Horizontal joint reinforcement shall be bent at corners in accordance with manufacturer's recommendation.

8. Where concrete block walls intersect foundation or stem walls, provide horizontal reinforcing corner dowels to match foundation wall horizontal steel. Dowel into block 18" minimum.

9. Control joints shall be placed in all masonry walls at 30'-0" o.c. or no farther than as noted on the drawings.

10. Horizontal wire reinforcement shall be discontinuous through all control joints except bond beams.

11. Vertical reinforcement shall deformed billet steel A615, Grade 40 unless otherwise noted. See drawings for size and spacing.

12. All splices in vertical reinforcement shall be lapped a minimum of 30 bar diameters but not less than 12" and where spliced, bars shall be separated by one bar diameter or wired together.

13. When a foundation dowel does not line up with a vertical core to be reinforced, it shall not be bent over, but shall be grouted into a core in direct vertical alignment, even though it is an adjacent cell to the vertical wall reinforcing.

14. Vertical bars shall be held in position at top and bottom and at intervals not exceeding 192 bar diameters.

15. Vertical reinforcing steel shall have a minimum clearance of 1/4" from the masonry to permit good bond with the grout.

16. Grout shall be of fluid consistency and shall have a minimum compressive strength of 3,000 p.s.i. in 28 days.

17. Grout-in cores of concrete block with grout as shown on drawings. Grout all cores below finish grade.

18. Vertical cells to be filled shall have vertical alignment to maintain a continuous unobstructed cell area not less than 2" x 3".

19. Reinforcing steel shall be secured in place and inspected. All debris, projecting mortar and mortar droppings shall be cleaned out before grouting starts.

20. Cells containing reinforcement shall be solidly filled with grout and pours shall be stopped 1-1/2" below the top of a course to form a key with the next course above.

DEGRAM & ASSOCIATES, INC.
STATE OF COLORADO 6806 REGISTERED PROFESSIONAL ENGINEER
TRW CS-3
3650 north nevada avenue
colorado springs, colorado 80907
STATE OF COLORADO JOHN JAMES WALLACE JR. B-280 REGISTERED ARCHITECT
john james wallace & associates
architects a.i.a.a.
102 north cascade avenue, 300
colorado springs, colorado 80903
telephone 303-632-2623

drawing title: GENERAL NOTES AND DETAILS

drawn: PJ

checked: MG

issued: JAN. 19, 1981

revised:

jjwa 7904

drawing S10 of 10